Tagra | Fire Rated | Standard | Recessed Downlight | Fixed | White

RD-STDF-W / ITM001386



Datasheet

23-10-2026

www.tagra-lighting.co.uk

support@tagra-lighting.co.uk

Tagra | Fire Rated | Standard | Recessed Downlight | Fixed | White



IP Rating	Mounting	Warranty
IP65	Recess	2 Years

SKU: RD-STDF-W
ITM: ITM001386

Key Features:

- **Body Colour:** White
- **Dimensions (W x H x L):** 87 x 40 x 87mm

Mechanical Data			
Body Colour:	White	**Product Weight:**	122g
Product Diameter:	87mm	**Dimensions (LxWxH):**	87 x 87 x 40mm

Environmental Data			
Anti-Glare:	Yes	**Application Environment:**	Indoor
Body Material:	Iron	**Ingress Protection (IP):**	IP65
Mounting Type:	Recessed		

Dimension Drawing

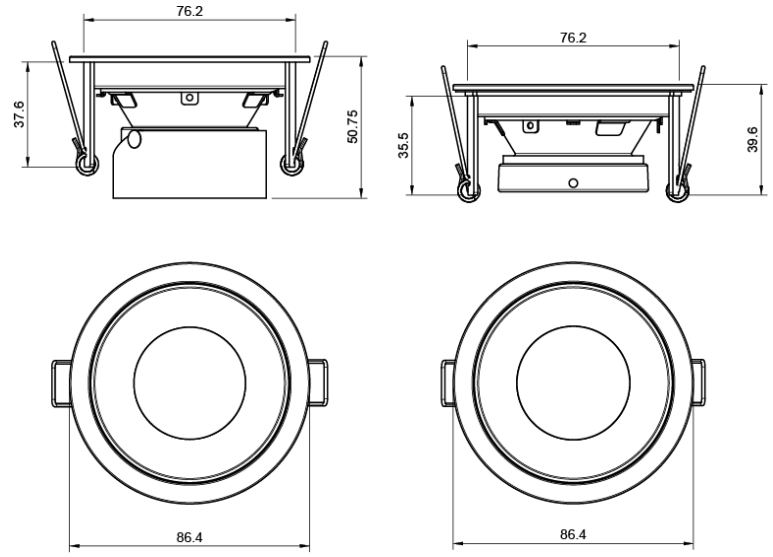

Packaging Data

Fixings Included:	Yes	**Packaging Height:**	90mm
Packaging Length:	90mm	**Packaging Width:**	60mm

Disclaimer

Tagra Lighting have taken reasonable care to ensure that the information in this datasheet is accurate at time of publication however it should be noted that all specifications are subject to tolerance. Descriptive specifications such as colour are subjective. Tagra Lighting reserve the right to update specifications without notice. The information in the datasheet may only be relied on by customers of Tagra Lighting in accordance with applicable terms and conditions.

Tagra Lighting is a trading name of T.R Ventures Limited, a company incorporated in England with registered number 07757720. Our registered office is Unit 2, Southfield Industrial Estate, Trafford Park, M17 1SJ.

www.tagra-lighting.co.uk

support@tagra-lighting.co.uk